PART NO.	LENGTH (in)
TS4158H(X)-120-(*)	120

(*) INSERT MATERIAL/FINISH:
PLN - PLAIN CARBON STEEL, ASTM A1011 GR.33
GLV - GALVANIZED STEEL, ASTM A653-G90 GR.33
HDG - HOT-DIP GALVANIZED, ASTM A123
SS6 - STAINLESS STEEL 316, ASTM A240

(X) INSERT CHANNEL TYPE:
BLANK - SOLID STRUT CHANNEL
S - SLOTTED STRUT CHANNEL
REFER T SLOT HOLE PATTERN

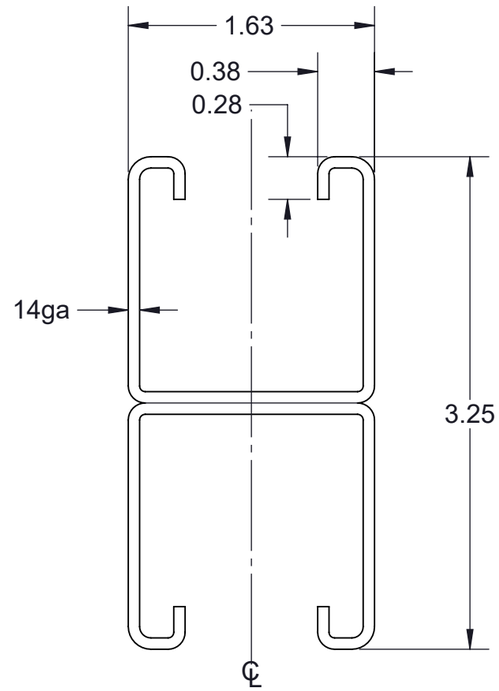

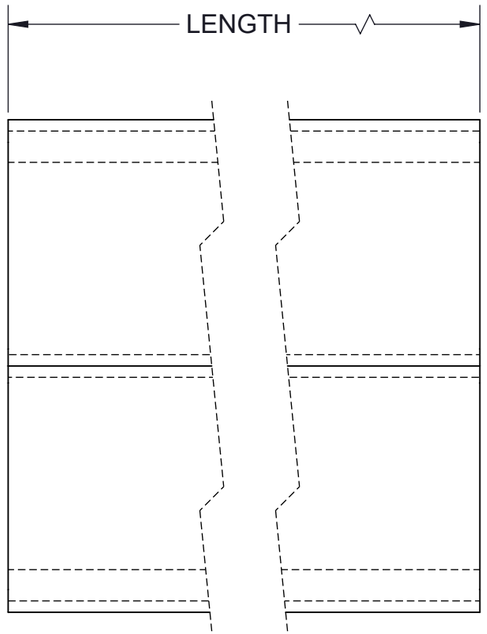

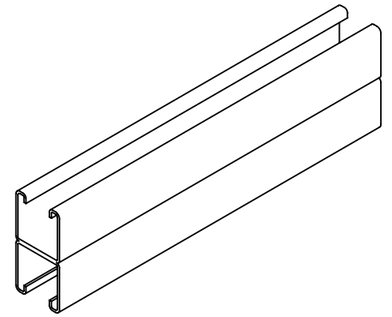

ISOMETRIC VIEW

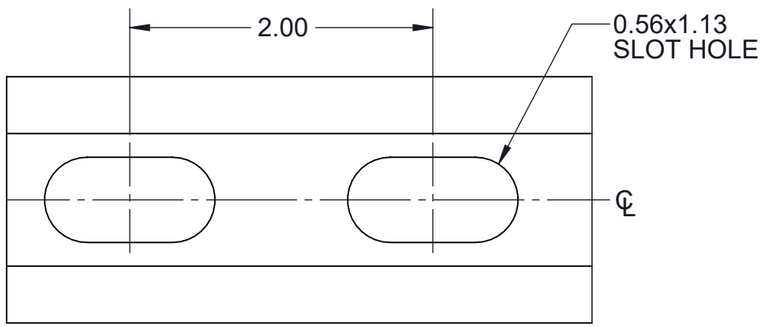

"S" HOLE PATTERN (IF APPLICABLE)

NOTES:
1) ALL DIMENSIONS SHOWN ARE NOMINAL.
2) DIMENSIONS SHOWN ARE IN INCHES UNLESS OTHERWISE NOTED.

PROPRIETARY AND CONFIDENTIAL.THE INFORMATION CONTAINED IN THIS DRAWING IS THE SOLE PROPERTY OF CT INNOVATIONS. ANY REPRODUCTION IN PART OR AS A WHOLE WITHOUT THE WRITTEN PERMISSION OF CT INNOVATIONS IS PROHIBITED.

CT INNOVATIONS

TITLE:
TS4158H(X)-120-(*)
3-1/4 X 1-5/8 X 14GA STRUT CHANNEL - H STYLE

DRAWN BY/DATE:	SIZE:	DWG. NO.:	REV:
LW 14FEB2023	**B**	**CTI-S11004**	**A**
APPROVED BY/DATE:	SCALE: **NTS**	CAD FILE NAME: TS4158XX_A CAD SAVE DATE: Tuesday, February 14, 2023 5:11:57 PM	SHEET: **1 OF 1**